Sturdicore™ Heavy Duty Return Grille (RSEA, RSHA, RTEA, RTHA)

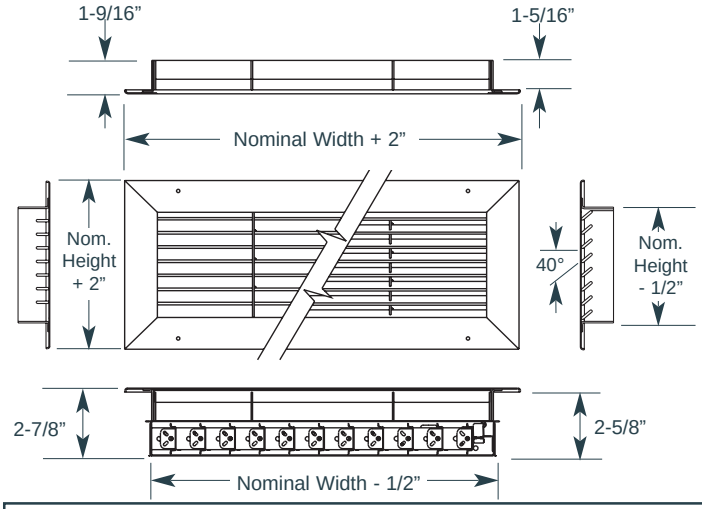

Application:

Use where durability is a major issue. Examples are gyms, locker rooms, factory floors, public areas and other places with high traffic and little supervision.

Standard Features:

- Blades are 1/8" thick steel, with rounded edges, placed on 2/3" centers.
- Blades are available set at 0° or at 40°.
- Blade supports are 14 gauge steel, placed on 6" centers.
- Frame is 18 gauge steel, with rounded edges and special reinforcements at the corners.
- Minimum single panel is 4" by 4".
- Maximum single panel is 72" wide (assuming horizontal blade placement) by 48" high.
- Standard Finish is electrocoat acrylic baked enamel.
- Standard color is #11 bright white.
- Registers use Opposed Blade Damper RXEA, adjustable from the face via flat blade screwdriver (p.A433).

Optional Features:

- UL-listed fusible link (p. A344).
- Tamper-proof screws (p. A343).
- Foam gasket around edge of frame.

Accessories:

- Can be mounted in All Purpose Frame Model RXSA when a plaster stop is needed for frequent removal (p. A420).

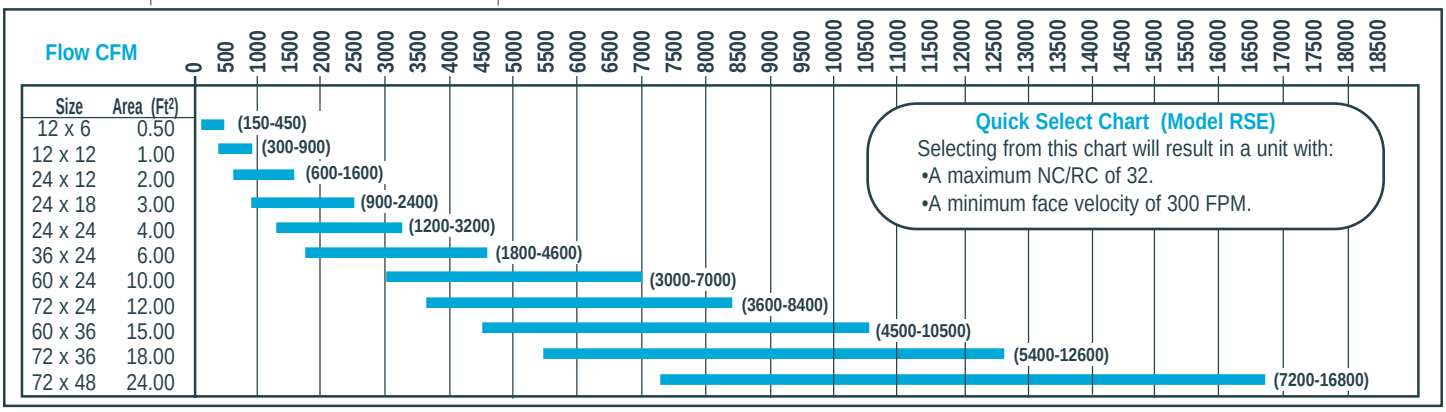

Model Numbering System

1	2	3	4	5	6	7	8	9	10	11	12	13	14	OPTIONS 15	16
R	S	E	A	H	0	0	4	0	0	4	0	1	1		

R - Register or Grille

S - Steel Grille
T - Steel Register

E - 0° Deflection Heavy Duty Return
H - 40° Deflection Heavy Duty Return

Design Series

Front Blade Alignment
H - Horizontal (Blades Parallel to Width)
V - Vertical (Blades Parallel to Height)

Width
004 - 4" Minimum

Height
04 - 4" Minimum.

Fractional Size
0 - 0" **4** - 1/2"
1 - 1/8" **5** - 5/8"
2 - 1/4" **6** - 3/4"
3 - 3/8" **7** - 7/8"

Finish
11 - Bright White (Default)
04 - Gray
01 - White
14 - Gray ARC (Acid Resistant Coating)
17 - White ARC (Acid Resistant Coating)

F - Fusible Link
G - Gasket
Q - Fusible Link & Gasket

Mounting
Y - Standard Screws (Default)
N - No Screw Holes
B - Tamper-Proof Screws

PERFORMANCE DATA - Sturdicore™ 40° Return R&G (RSHA, RTHA)

	Duct Velocity (fpm)	300	400	500	600	700	800	900	1000
	Velocity Press. (w.g.)	0.006	0.010	0.016	0.022	0.030	0.040	0.050	0.062
Size	Neg. Static Press. (w.g.)	0.022	0.038	0.060	0.086	0.117	0.152	0.194	0.237
10” x 6”	Flow (cfm)	**125**	**167**	**208**	**250**	**292**	**333**	**375**	**417**
(.42 ft^2)	Sound (NC/RC)	14/11R	24/16R	22/29R	33/27N	35/31N	38/35N	39/38N	41/41N
12” x 6”	Flow (cfm/)	**150**	**200**	**250**	**300**	**350**	**400**	**450**	**500**
(.50 ft^2)	Sound (NC/RC)	15/11R	25/16R	30/22R	34/27N	37/32N	39/36N	41/39N	43/42N
10” x 8”	Flow (cfm)	**167**	**222**	**278**	**333**	**389**	**444**	**500**	**556**
(.56 ft^2)	Sound (NC/RC)	16/11R	25/17R	31/23R	35/28N	38/33N	40/37N	42/39N	44/42?
12” x 8”	Flow (cfm)	**200**	**267**	**333**	**400**	**467**	**533**	**600**	**667**
(.67 ft^2)	Sound (NC/RC)	17/12R	26/17R	32/23R	36/29N	39/33N	42/38N	44/40N	46/43N
18” x 6”	Flow (cfm)	**225**	**300**	**375**	**450**	**525**	**600**	**675**	**750**
(.75 ft^2)	Sound (NC/RC)	18/12R	27/18R	33/24R	37/29N	40/34N	42/38N	45/41N	46/43N
12” x 12”	Flow (cfm)	**300**	**400**	**500**	**600**	**700**	**800**	**900**	**1000**
(1.00 ft^2)	Sound (NC/RC)	19/12R	28/18R	34/25R	38/30N	41/35N	44/39N	46/42N	48/44N
18” x 12”	Flow (cfm)	**450**	**600**	**750**	**900**	**1050**	**1200**	**1350**	**1500**
(1.50 ft^2)	Sound (NC/RC)	20/13R	29/20R	35/27R	39/32N	42/37N	45/41N	48/44N	50/46N
24” x 12”	Flow (cfm)	**600**	**800**	**1000**	**1200**	**1400**	**1600**	**1800**	**2000**
(2.00 ft^2)	Sound (NC/RC)	21/14R	30/21R	36/28R	40/34N	43/38N	46/42N	49/4N	51/47n
18” x 18”	Flow (cfm)	**675**	**900**	**1125**	**1350**	**1575**	**1800**	**2025**	**2250**
(2.25 ft^2)	Sound (NC/RC)	21/14R	30/21R	36/28R	40/34N	44/39N	47/43N	49/46N	51/48N
30” x 12”	Flow (cfm)	**750**	**1000**	**1250**	**1500**	**1750**	**2000**	**2250**	**2500**
(2.50 ft^2)	Sound (NC/RC)	21/15R	30/22R	37/29R	41/35N	44/40N	47/43N	49/46N	52/48N
24” x 18”	Flow (cfm)	**900**	**1200**	**1500**	**1800**	**2100**	**2400**	**2700**	**3000**
(3.00 ft^2)	Sound (NC/RC)	22/15R	31/22R	37/30R	41/36N	45/41N	48/44N	50/47N	53/49N
30” x 18”	Flow (cfm)	**1125**	**1500**	**1875**	**2250**	**2625**	**3000**	**3375**	**3750**
(3.75 ft^2)	Sound (NC/RC)	23/16R	32/23R	38/31R	42/37N	46/42N	49/45N	51/48N	53/50N
24” x 24”	Flow (cfm)	**1200**	**1600**	**2000**	**2400**	**2800**	**3200**	**3600**	**4000**
(4.00 ft^2)	Sound (NC/RC)	23/16R	32/23R	38/31R	42/37N	46/42N	49/46N	51/48N	54/51N
36” x 18”	Flow (cfm)	**1350**	**1800**	**2250**	**2700**	**3150**	**3600**	**4050**	**4500**
(4.50 ft^2)	Sound (NC/RC)	23/16R	32/24R	39/32R	43/38N	46/43N	49/47N	52/49N	54/41N
30” x 24”	Flow (cfm)	**1500**	**2000**	**2500**	**3000**	**3500**	**4000**	**4500**	**5000**
(5.00 ft^2)	Sound (NC/RC)	24/16R	33/24R	39/32R	43/38N	47/43N	50/47N	52/50N	55/52N
36” x 24”	Flow (cfm)	**1800**	**2400**	**3000**	**3600**	**4200**	**4800**	**5400**	**6000**
(6.00 ft^2)	Sound (NC/RC)	24/17R	34/25R	40/33R	44/39N	47/44N	50/48N	53/51N	55/53N
36” x 30”	Flow (cfm))	**2250**	**3000**	**3750**	**4500**	**5250**	**6000**	**6750**	**7500**
(7.50 ft^2)	Sound (NC/RC)	25/18R	34/26R	41/34R	45/41N	48/46N	51/49N	54/52N	56/54N
48” x 24”	Flow (cfm)	**2400**	**3200**	**4000**	**4800**	**5600**	**6400**	**7200**	**8000**
(8.00 ft^2)	Sound (NC/RC)	25/18R	35/26R	41/35R	45/41N	49/46N	52/50N	54/52N	57/54N
54” x 24”	Flow (cfm)	**2700**	**3600**	**4500**	**5400**	**6300**	**7200**	**8100**	**9000**
(9.00 ft^2)	Sound (NC/RC)	28/18R	35/27R	41/35R	45/42N	49/47N	52/50N	55/53N	57/55N
60” x 24”	Flow (cfm)	**3000**	**4000**	**5000**	**6000**	**7000**	**8000**	**9000**	**10000**
(10.00 ft^2)	Sound (NC/RC)	26/18R	35/27R	42/36R	46/42N	50/47N	53/51N	55/53N	58/55N
42” x 36”	Flow (cfm)	**3150**	**4200**	**5250**	**6300**	**7350**	**8400**	**9450**	**10500**
(10.50 ft^2)	Sound (NC/RC)	26/19R	36/28R	42/36R	46/43N	50/48N	53/51N	55/54N	58/56N
66” x 24”	Flow (cfm)	**3300**	**4400**	**5500**	**6600**	**7700**	**8800**	**9900**	**11000**
(11.00 ft^2)	Sound (NC/RC)	26/19R	36/28R	42/36R	46/43N	50/48N	53/51N	55/54N	58/56N
54” x 30”	Flow (cfm)	**3375**	**4500**	**5625**	**6750**	**7875**	**9000**	**10125**	**11250**
(11.15 ft^2)	Sound (NC/RC)	27/19R	36/28R	42/36R	46/43N	50/48N	53/52N	56/54N	58/56N
72” x 24”	Flow (cfm)	**3600**	**4800**	**6000**	**7200**	**8400**	**9600**	**10800**	**12000**
(12.00 ft^2)	Sound (NC/RC)	27/19R	36/28R	43/37R	47/44N	50/48N	54/52N	56/54N	59/56N

Performance Data Notes:

1. Performance data is based on tests conducted in accordance with ANSI/ASHRAE Standard 70-1991. Actual performance in the field may vary.
2. Testing was conducted in isothermal conditions.
3. NC and RC values are based on a room absorption of 10db re 10^{-12} watts.

PERFORMANCE DATA - Sturdicore™ 40° Return R&G (RSHA, RTHA)

Size	Duct Velocity (fpm)	300	400	500	600	700	800	900	1000
	Velocity Press. (w.g.)	0.006	0.010	0.016	0.022	0.030	0.040	0.050	0.062
	Neg. Static Press. (w.g.)	0.022	0.038	0.060	0.086	0.117	0.152	0.194	0.237
60" x 30"	Flow (cfm)	**3750**	**5000**	**6250**	**7500**	**8750**	**10000**	**11250**	**12500**
(12.50 ft^2)	Sound (NC/RC)	27/19R	36/38R	43/37R	47/44R	50/49N	54/52N	56/54N	59/56N
54" x 36"	Flow (cfm)	**4050**	**5400**	**6750**	**8100**	**9450**	**10800**	**12150**	**13500**
(13.50 ft^2)	Sound (NC/RC)	27/19R	37/29R	43/37R	47/44N	51/49N	54/53N	57/55N	59/57N
48" x 42"	Flow (cfm)	**4200**	**5600**	**7000**	**8400**	**9800**	**11200**	**12600**	**14000**
(14.00 ft^2)	Sound (NC/RC)	27/20R	37/29R	43/38R	47/45N	51/49N	54/53N	57/55N	59/57N
60" x 36"	Flow (cfm)	**4500**	**6000**	**7500**	**9000**	**10500**	**12000**	**13500**	**15000**
(15.00 ft^2)	Sound (NC/RC)	28/20R	37/29R	43/38R	47/45N	51/50N	54/53N	57/55N	60/57N
48" x 48"	Flow (cfm)	**4800**	**6400**	**8000**	**9600**	**11200**	**12800**	**14400**	**16000**
(16.00 ft^2)	Sound (NC/RC)	28/20R	37/30R	44/38R	48/45N	51/50N	55/54N	57/56N	60/58N
66" x 36"	Flow (cfm)	**4950**	**6600**	**8250**	**9900**	**11550**	**13200**	**14850**	**16500**
(16.50 ft^2)	Sound (NC/RC)	28/20R	37/30R	44/39R	48/46N	51/50N	55/54N	57/56N	60/58N
72" x 36"	Flow (cfm)	**5400**	**7200**	**9000**	**10800**	**12600**	**14400**	**16200**	**18000**
(18.00 ft^2)	Sound (NC/RC)	28/20R	38/30R	44/39R	48/46N	52/51N	55/54N	58/56N	60/58N
60" x 48"	Flow (cfm)	**6000**	**8000**	**10000**	**12000**	**14000**	**16000**	**18000**	**20000**
(20.00 ft^2)	Sound (NC/RC)	29/21R	38/31R	45/40R	49/47N	52/52N	56/55N	58/57N	61/59N
66" x 48"	Flow (cfm)	**6600**	**8800**	**11000**	**13200**	**15400**	**17600**	**19800**	**22000**
(22.00 ft^2)	Sound (NC/RC)	29/21R	39/31R	45/40R	49/48N	53/52N	56/56N	59/58N	61/59N
72" x 48"	Flow (cfm)	**7200**	**9600**	**12000**	**14400**	**16800**	**19200**	**21600**	**24000**
(24.00 ft^2)	Sound (NC/RC)	30/22R	39/32R	45/41R	49/48N	53/53N	57/56N	59/58N	62/60N

Performance Data Notes:

1. Performance data is based on tests conducted in accordance with ANSI/ASHRAE Standard 70-1991. Actual performance in the field may vary.
2. Testing was conducted in isothermal conditions.
3. NC and RC values are based on a room absorption of 10db re 10^{-12} watts.

NOTES:

Screw Hole Location on Steel Registers and Grilles

- Screw holes on the face are standard on Registers and Grilles.
- Steel R&G can be ordered without screw holes, for use with concealed hangers.
- The screw hole is 5/32" in diameter, counter sunk.
- Each Register or Grille is provided with the appropriate number of screws as standard.
- The standard screw is a #8 x 1-1/4" counter sunk screw, with a flat blade head.
- Tamper-proof screws are available as an option.

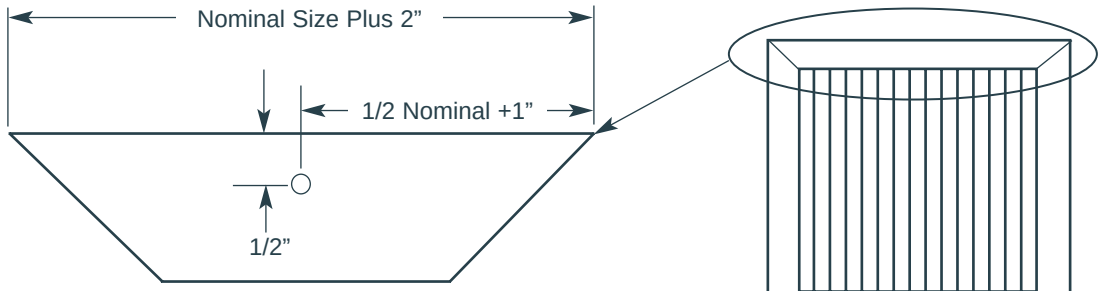

One Screwhole per Side
Nominal Size Range 4" through 18".

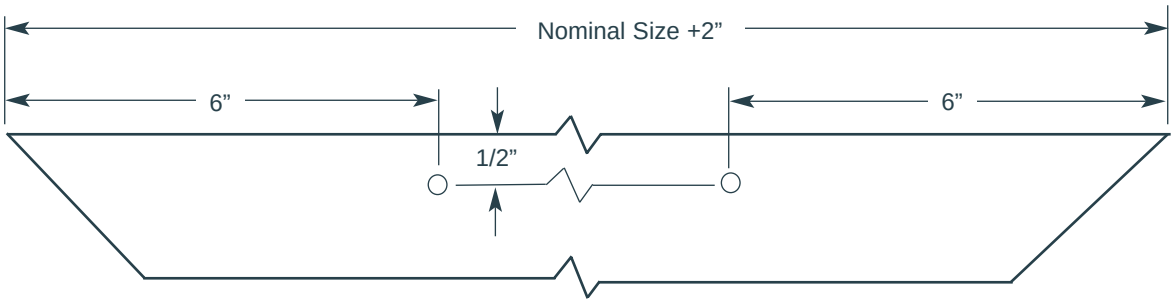

Two Screwholes per Side
Nominal Size Range 19" through 31".

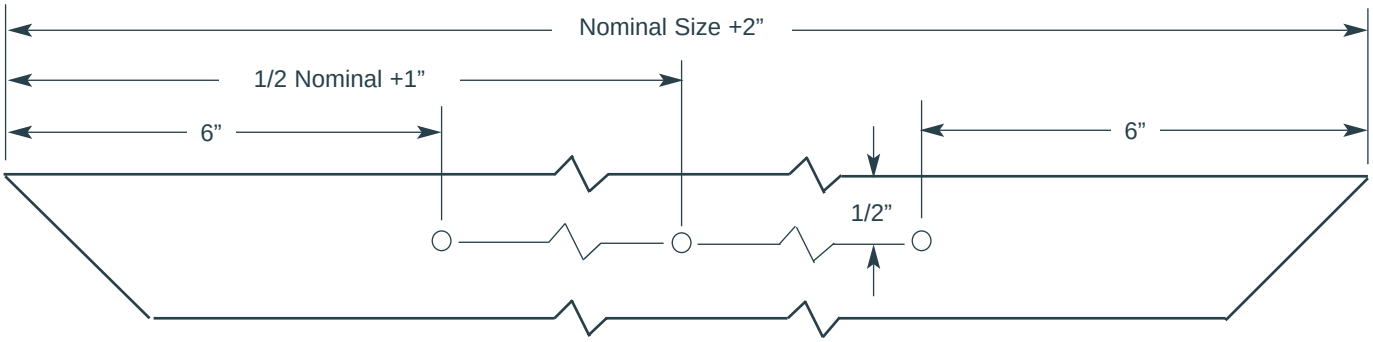

Three Screwholes per Side
Nominal Size Range 32" through 48".

Screw Hole Location for the following Registers & Grilles

40° Return RSHA, RTHA
0° Return RSEA, RTEA

Hole location for long side (if grille is rectangular) or opposite sides (if grille is square).

Nominal Size ->	4” (102)	6” (152)	8” (203)
Dim. “A” ->	3” (76)	4” (102)	5” (127)

Nominal Size ->	10” (254)	12” (305)	14” (356)	16” (406)	18” (457)	20” (508)

Nominal Size ->	22” 559)	24” (610)	26” (660)	28” (711)	30” (762)	32” (813)	34” (864)	36” (914)
Dim. “A” ->	12” (305)	13” (330)	14” (356)	15” (381)	16” (406)	17” (432)	18” (457)	19” (483)

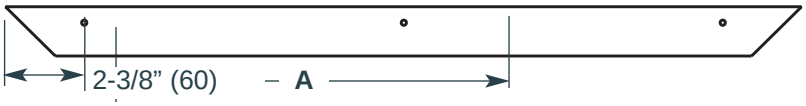

Nominal Size ->	38” (965)	40” (1016)	42” (1067)	44” (1118)	46” (1168)	48” (1219)	50” (1270)	52” (1321)
Dim. “A” ->	14” (356)	15” (381)	15½” (394)	16” (406)	17” (432)	17½” (445)	18” (457)	19” (483)

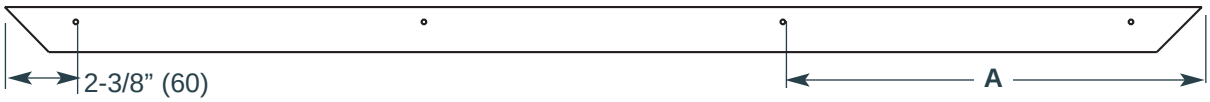

Nominal Size ->	54” (1372)	56” (1422)	58” (1473)	60” (1524)	62” (1575)	64” (1626)	66” (1676)	68” (1727)
Dim. “A” ->	15” (381)	15½” (394)	16” (406)	16½” (419)	17” (432)	17½” (445)	18” (457)	18½” (470)
Dim. “B” ->	28” (711)	29” (737)	30” (762)	31” (787)	32” (813)	33” (838)	34” (864)	35” (889)

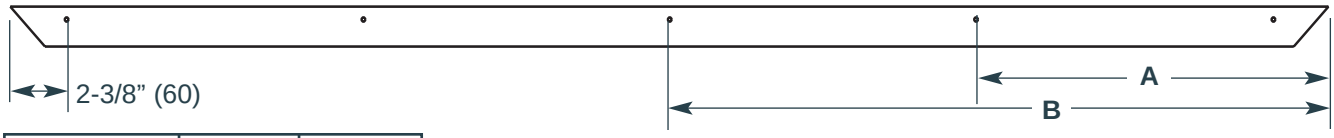

Nominal Size ->	70” (1778)	72” (1829)
Dim. “A” ->	15½” (394)	16” (406)
Dim. “B” ->	29” (737)	30” (762)

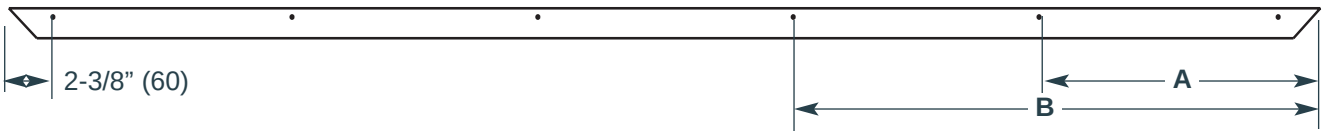

Hole Location for other sides.

Nominal Size ->	4” (102)	6” (152)	8” (203)	10” (254)	12” (305)	14” (356)
	No Screw Holes					

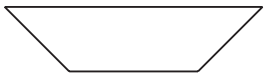

Nominal Size ->	16” (406)	18” (457)	20” (508)	22” (559)	24” (610)	26” (660)	28” (711)	30” (762)
Dim. “A” ->	9” (229)	10” (254)	11” (279)	12” (305)	13” (330)	14” (356)	15” (381)	16” (406)

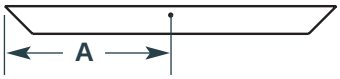

Nominal Size ->	32” (813)	34” (864)	36” (914)	38” (965)	40” (1016)	42” (1067)	44” (1118)	46” (1168)	48” (1219)
Dim. “A” ->	11” (279)	12” (305)	13” (330)	13” (330)	14” (356)	15” (381)	16” (406)	16” (406)	17” (432)

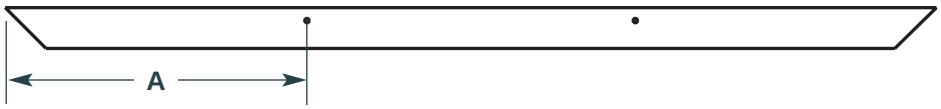

Notes:

1. Standard screws are #8 x 1¼” (32) Phillips head sheet metal screws.
2. Holes are countersunk for flush appearance.
3. Hole center is placed 1/2” (13) in from outside edge.
4. Metric (SI) dimensions are given in millimeters.

SCREW HOLE LOCATIONS

For M-Series Aluminum Registers and Grilles
(except Door and Partition Grilles)

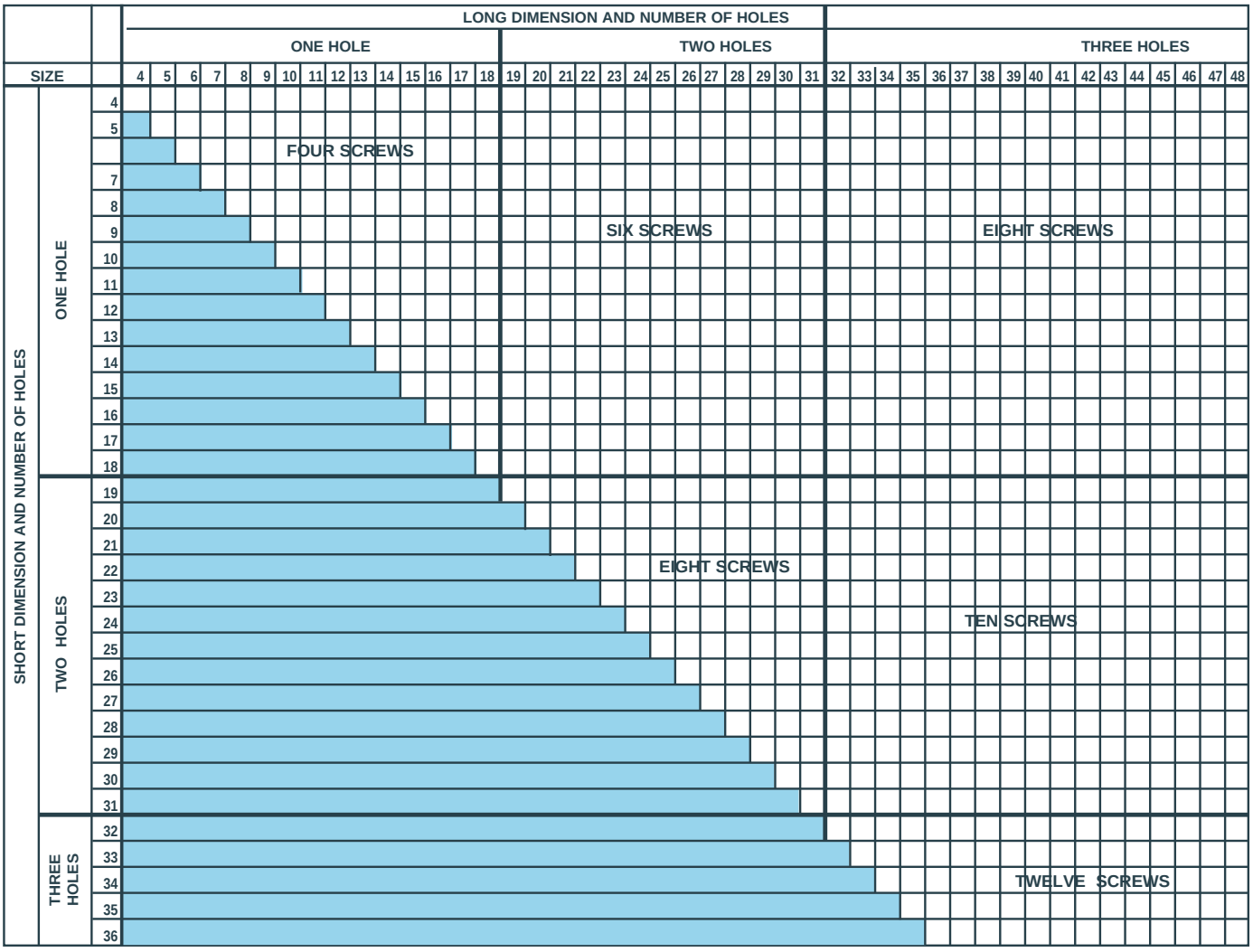

NOTES:

When one mounting per side is provided:

When two mounting holes per side are provided:

When three mounting holes per side are provided:

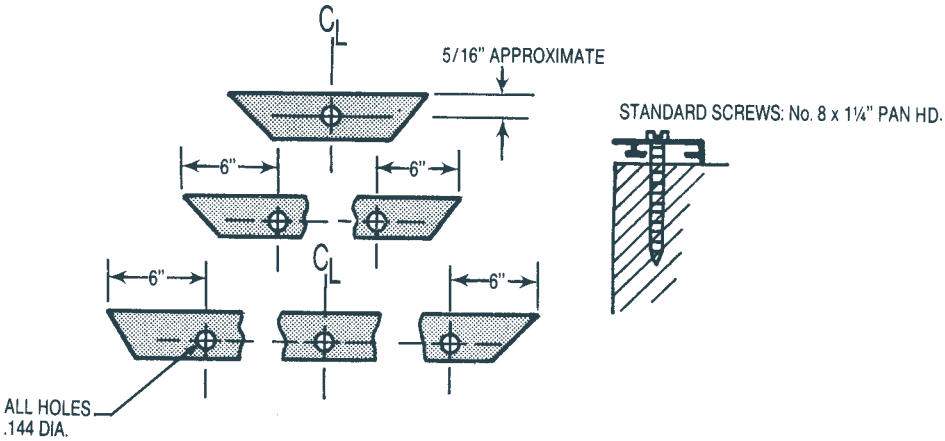

Heavy Duty Registers & Grilles

Panel for T-bar Ceiling (Option T)

Application

This option is used when the grille is to mount in a suspended ceiling, but is too small to lay in by itself. The grille is set in a panel that will lay into the appropriate size and type of ceiling.

Features

The largest grille in this catalog that will fit in the following T-bar grid sizes is as follows:

T-bar Grid	Maximum Grille Nominal Size
12” x 12”	8” x 8”
12” x 24”	8” x 20”
24” x 24”	20” x 20”
24” x 48”	20” x 44” (Louvered and Perforated Face Returns)
24” x 48”	20” x 36” (Single and Double Deflection Supplies, and 0° and 45° Returns)

Sizing Note:

Carnes offers all steel, stainless steel and B-series aluminum grilles in a nominal 21-3/4” x 21-3/4” size that lays into standard 15/16” flat face T-bar with no need for Option T.

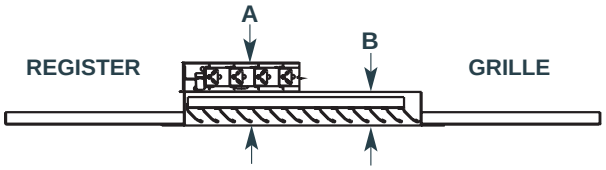

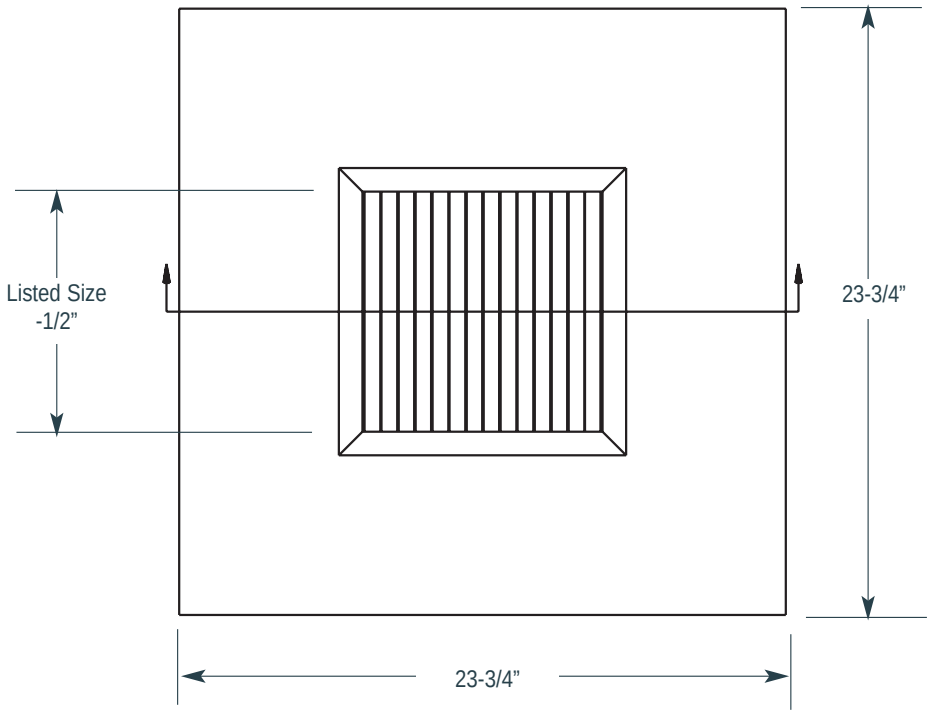

Sheared Frame for T-bar (Option S)

Application

This option is used when the grille is sized to lay into a suspended ceiling, and the design requires the largest possible grille for the opening.

Features

When this option is specified on the following sizes, Carnes shears the grille frame down to the following face outside diameters for layin ceilings.

Grille Nominal Size	Normal Face O. D.	Sheared Face O. D.
10” x 10”	12” x 12”	11-3/4” x 11-3/4”
10” x 22”	12” x 24”	11-3/4” x 23-3/4”
22” x 22”	24” x 24”	23-3/4” x 23-3/4”
22” x 46”	24” x 48”	23-3/4” x 47-3/4” (Note: This size is only available on steel and B-series aluminum louvered and perforated face returns)

Sizing Note:

Carnes offers all steel, stainless steel and B-series aluminum grilles in a nominal 21-3/4” x 21-3/4” size that lays into standard 15/16” flat face T-bar with no need for Option S.

No Screw Holes (Option N)

Application

This option is used when the grille is sized to lay into a suspended ceiling, and screw holes are therefore not needed, or when the installation requires custom placement of the screw holes.

Features

When this option is specified, Carnes manufactures the grille with no screw holes in the face.

Tamper-Proof Screws (Option B)

Application

This option is used to prevent casual access to the duct.

Features

- The screw used is Holt-Head Type A tamper-proof screw, size #8 x 1-1/4".
- Hand drivers, service drivers and power driver tips are available from Carnes.

Z-Clips for Spline Ceiling (Option Z)

Application

This is used to mount certain grille sizes in concealed spline ceilings.

Features

The option is applied to any of the steel, stainless steel and B-series aluminum grilles in the following nominal sizes to mount in the following concealed spline ceiling sizes:

Grille Nominal Size	Spline Ceiling Size
10" x 10"	12" x 12"
10" x 22	12" x 24"
22" x 22"	24" x 24"

Sizing Note:

- Screw holes are automatically deleted when Option Z is specified.
- For grille sizes smaller than shown, custom mounting panels are available on request.

W-Clips for Snap-in Metal Pan Ceiling (Option U)

Application

This option is used to mount certain grille sizes in snap-in metal pan ceilings.

Features

This option is applied to any of the steel, stainless steel and B-series aluminum grilles in the following nominal sizes to mount in the following snap-in metal pan ceilings.

Grille Nominal Size	Snap-in Metal Pan Ceiling Size
22" x 22"	24" x 24"
10" x 22"	12" x 24"

- Screw holes are automatically deleted when Option U is specified.
- For grille sizes smaller than shown, custom mounting panels are available on request.

NOTES:

Debris Screen (Option 1)

Application

This option is used to prevent insects from getting through the grille, either into the duct or into the room.

Features

- The material used is 1814 insect screen.
- This option is available on both grilles and registers.

Concealed Hangers (Option C)

Application

This option is used to provide concealed mounting and tools-free duct access.

Features

- It requires that the duct be made 1” larger than the nominal grille size.
- If the duct is already installed, as in retro-fits, sizing the grille down by 1” will accomplish the same thing.
- Screw holes are automatically deleted when Option C is specified.
- A spring is factory-mounted on the back of the flange, and this spring snaps into a mounting bracket that is field mounted in the duct opening.

Pull Cord Damper Operator (Options P and A)

Application

This option allows balancing when the damper is mounted upstream of the grille, and the only access to the damper is through the grille.

Features

- Heavy duty cord is permanently mounted to damper.
- Cord ends are tucked behind grille face after balancing.
- Option P is used when the damper is mounted parallel to the floor.
- Option A is used when the damper is mounted perpendicular to the floor.

Lever Operator (Option V)

Application

This option allows tools-free balancing from the face of the register.

Features

- Lever is permanently mounted to register.
- Option V is available on these models:

	Steel	Aluminum	Stainless Steel
Single Deflection Supply	RTSB	RNSM	RMSB
Double Deflection Supply	RTDB	RNDM	RMDB
0° Fixed Return	RTRB	RNRM	RMRB
45° Fixed Return	RTAB	RNAM	RMAB

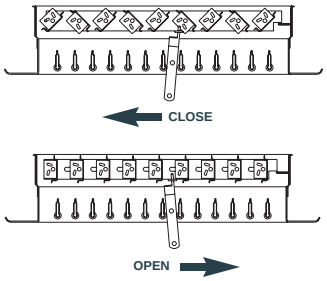

Fusible Link for Register (Option F)

Application

Fusible links are general used in hazardous locations to prevent the possible spread of fire or reduce updrafts in case of fire. They are not UL-listed as fire dampers.

Features

- The link melts at approximately 160° Fahrenheit, activating a spring which pulls the damper closed.
- A link is mounted to each damper in a multi-damper assembly.
- The link does not interfere with the normal setting of the damper, but requires one inch of added depth in the duct.

Square/Rectangular Damper Model RXEA shown with Fusible Link installed.

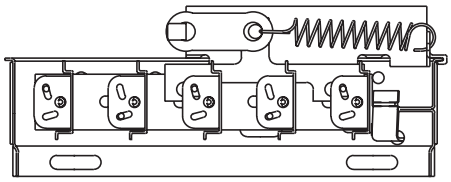

Option "M" for 1-1/2" Double Deflection Supply Grille Model R&G

Application:
Use with the Double Deflection 1-1/2" Supply Grille when frequent or regular removal is required, either for cleaning or periodic alteration of the discharge.

Standard Features:
- All Extruded Aluminum Construction
- Grille is held to frame by 1/4-turn fasteners.
- Standard finish is #20 Mill Finish.

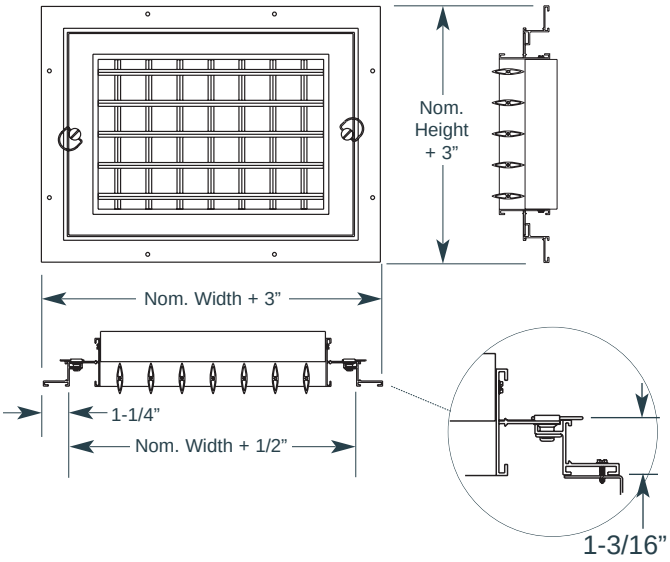

NOTES: