WIRING DIAGRAM

Models HBHJ, HCHJ, HSHJ, HTHJ
380, 415, 460, 575V — 3 Phase
125, 150, 175, 200 LB/HR

CARNES COMPANY 448 S. Main St., P. O. Box 930040, Verona, WI 53593-0040 Phone: (608)845-6411 Fax: (608)845-6504 www.carnes.com

NOTES:

1. Observe proper polarity when using voltage or current devices.
2. If air flow and high limit switches are not used, a jumper must be installed.

——— By Carnes
- - - - - By Others

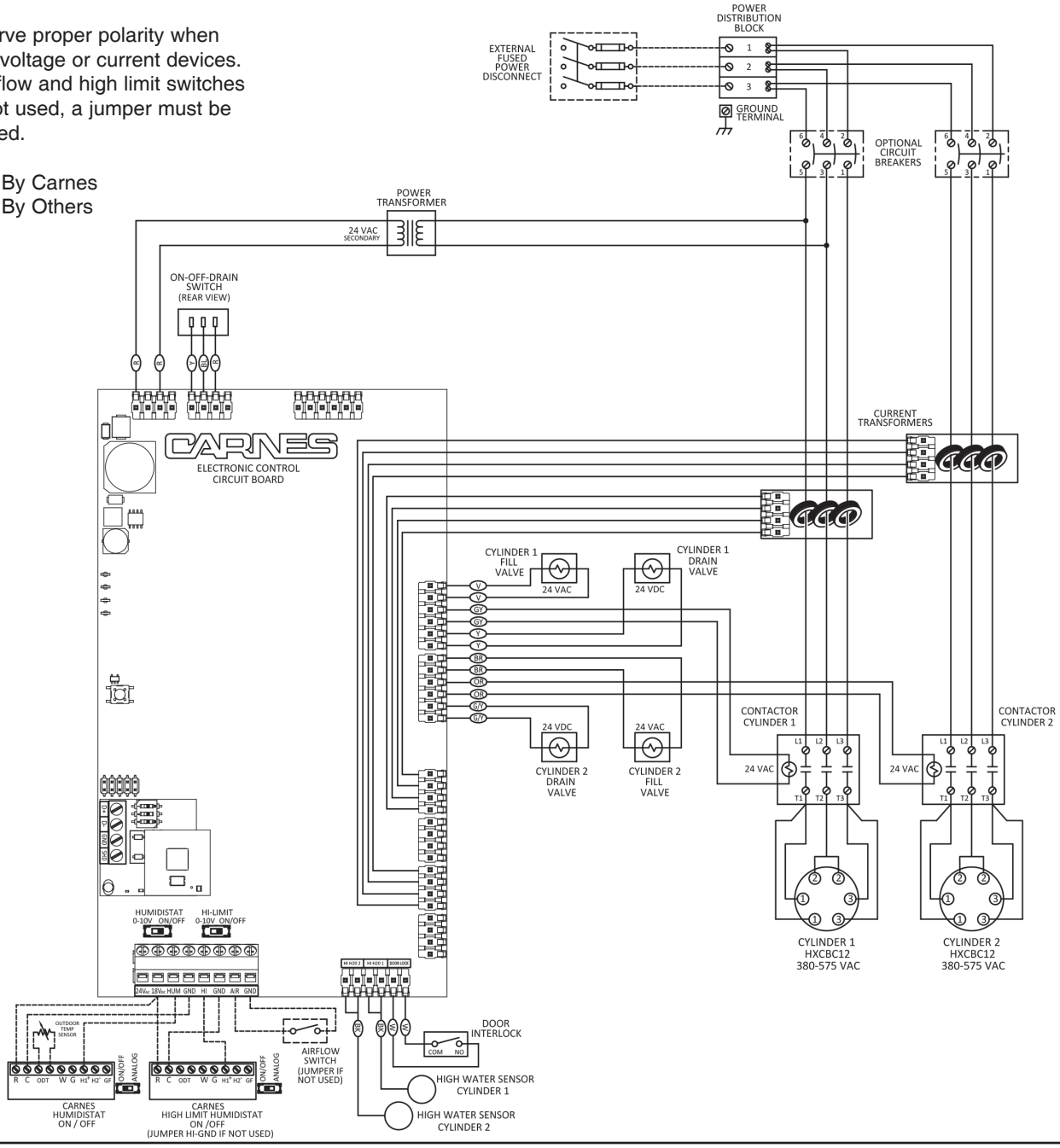

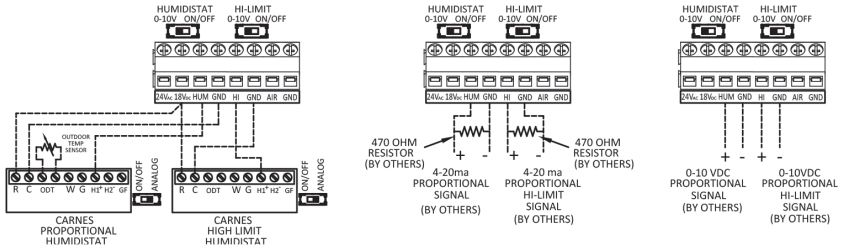

OPTIONAL PROPORTIONAL CONTROLS

COPYRIGHT © 2021 CARNES COMPANY
ALL RIGHTS RESERVED

16781